EXAMPLE DRAWINGS
(FOR REFERENCE ONLY)

NOTICE

EFFECTIVE SEPTEMBER 1, 2004

ALL PERMIT SUBMITTALS WILL BE REQUIRED TO HAVE A RIGHT OF WAY PERMIT FOR DRIVEWAY TIE-IN TO COUNTY ROADS FROM PUBLIC WORKS OR STATE HIGHWAY TIE-IN FROM ADOT, IN ORDER FOR THE APPLICATION TO BE ACCEPTED.

EXCEPTION: BUILDING TO HAVE ACCESS FROM A PRIVATE ROAD.

PANEL SCHEDULE 200 AMP M.B.

DESTINATION	CIR	BRKR	AWG	AWG	BRKR	CIR	DESTINATION
HP-1	1	50	AL 4	6-3	50	2	RANGE & OVEN
	3	2P	6 CU	W/GND. 4 AL	2P	4	
WATER HEATER	5	30	10-2	10-3	30	6	DRYER
	7	2P	CU	CU W/GND	2P	8	
SPARE	9					10	SPARE
	11					12	
WASHER	13	20	12-2 CU	14-2 CU	15	14	LTS ONLY
		IP			1P		
D/W-DISIP.	15					16	LTS & RECEPTS.
KITCHEN(GFCI)	17					18	
KITCHEN (GFCI)	19					20	
REF.	21					22	
GREAT ROOM	23					24	
DINING	25					26	
GARAGE GFCI	27					28	
EXT.GFCI RECEPTS.	29					30	SMOKE DETECTOR
UTILITY (GFCI)	31					32	SPARE
FURNACE	33					34	
BATH GFCI	35					36	
	37					38	
SPARE	39					40	

Rev. 1/18/2019

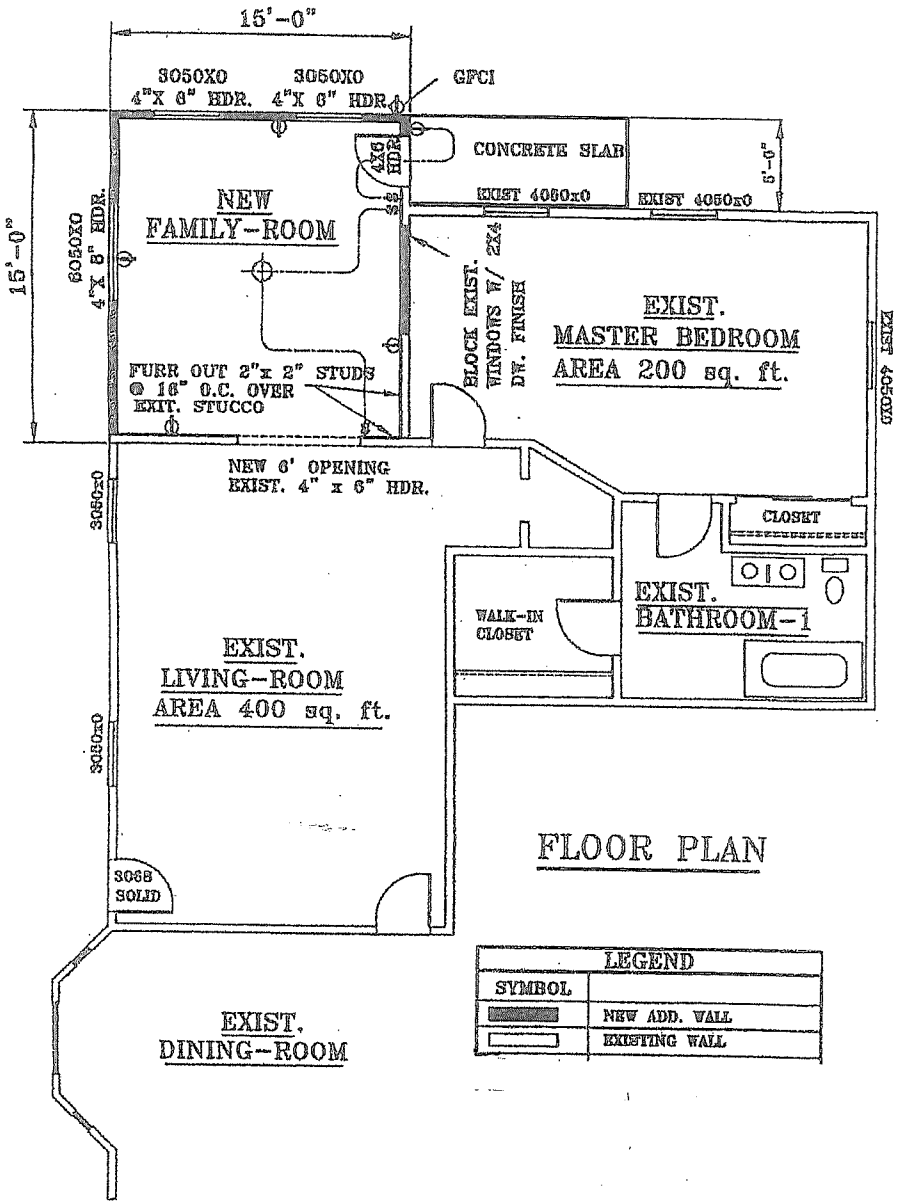

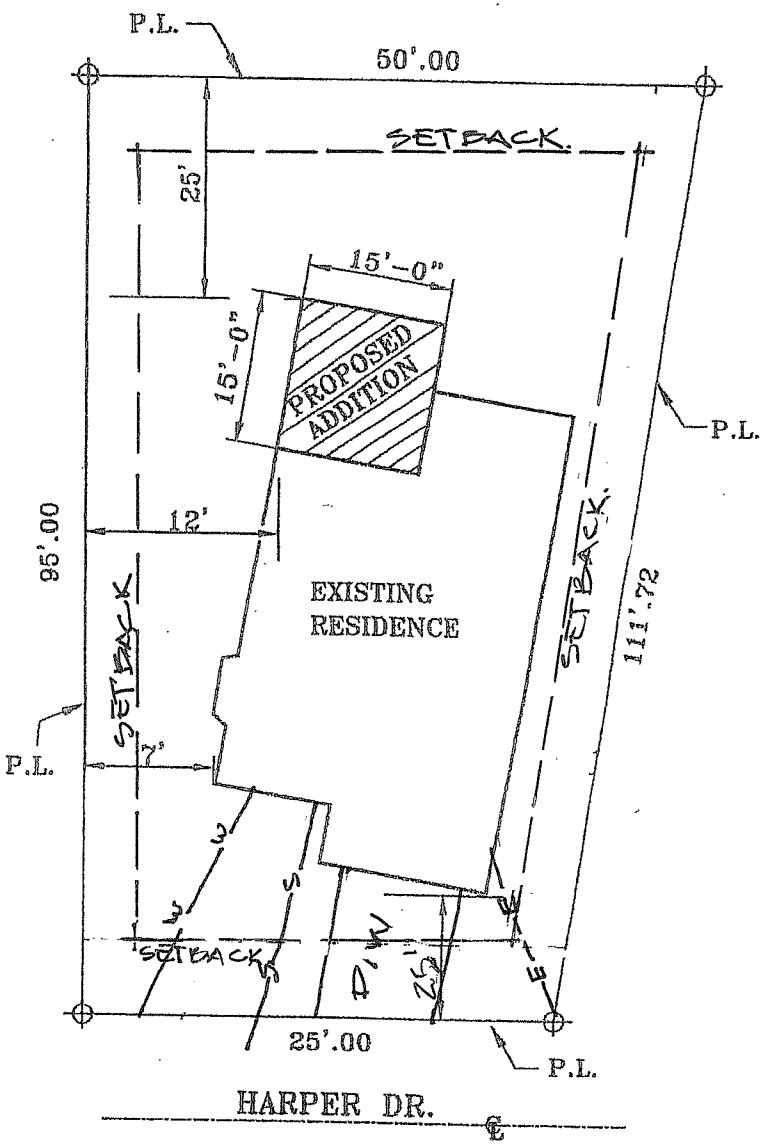

NOTE: ALL DRAWINGS IN THIS PAMPHLET ARE CONCEPTUAL EXAMPLES ONLY AND DO NOT COVER ALL CODE REQUIREMENTS

N

PLOT PLAN
SCALE: 1" = 20'
LOT 231 HERNANDEZ ACRES
8355 W. HARPER DR.

ASSESSOR PARCEL NUMBER

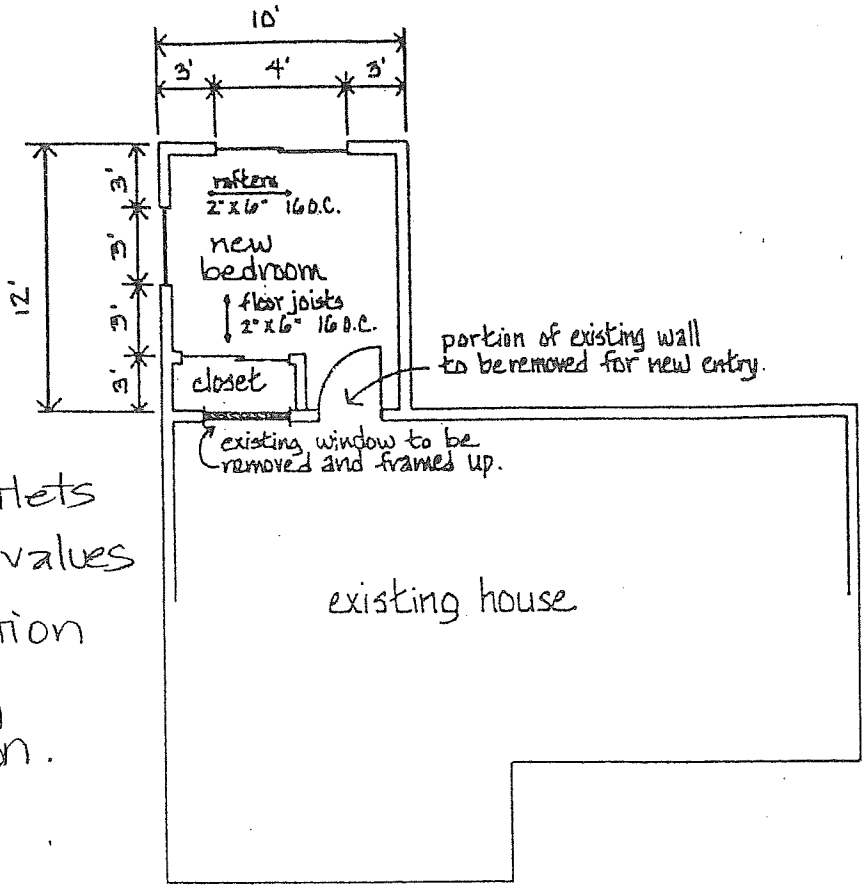

- show all outlets
- window U-values
- name portion of existing construction.

FLOOR PLAN not to scale

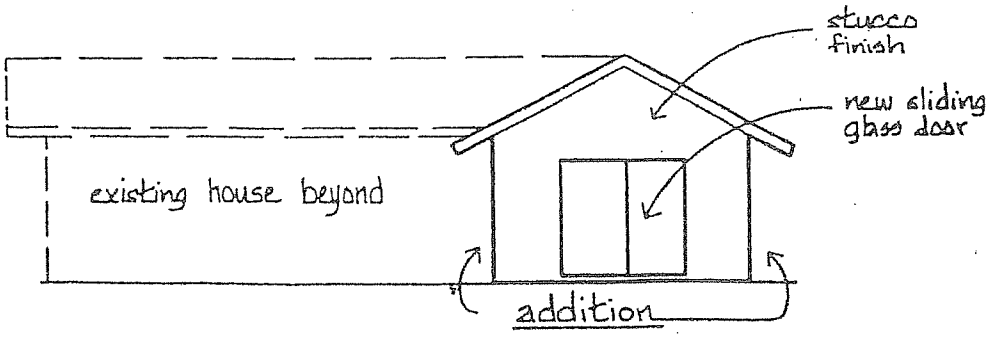

ELEVATION not to scale

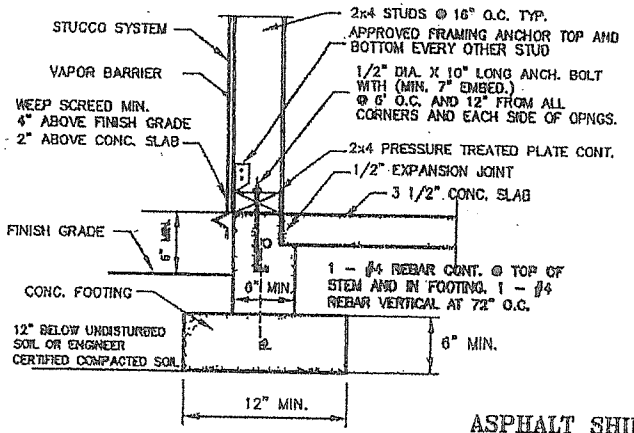

1 EXTERIOR WALL FOOTING
ALTENATE: MONOLITHIC FOOTING
ASK FOR DETAILS

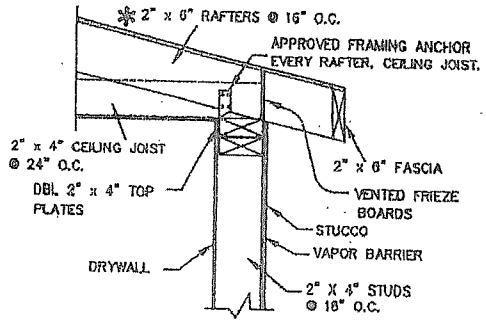

2 ROOF FRAME DETAIL
NTS

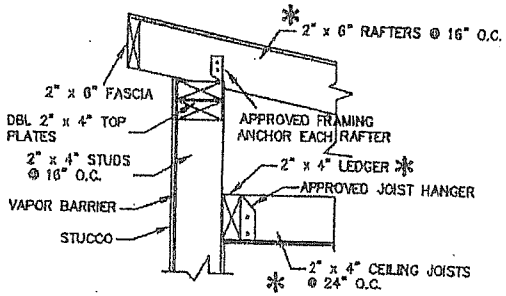

3 ROOF FRAME DETAIL
NTS

ASPHALT SHINGLES:

ONE (1) LAYER OF TYPE 15 FELT SHALL BE APPLIED SHINGLE FASHION (OVERLAPPING), PRIOR TO THE INSTALLATION OF THE SHINGLES.

SHINGLES SHALL BE FASTENED ACCORDING TO MANUFACTURER'S INSTRUCTIONS, EXCEPT THAT THE FOLLOWING NUMBER OF NAILS SHALL BE USED:

A. SELF-SEALING TYPE SHINGLES – 4 NAILS PER 36-INCH STRIP.

B. STANDARD 3-TAB SHINGLES – 6 NAILS PER 36-INCH STRIP.

C. INDIVIDUAL SHINGLES LESS THAN 18" WIDE – 2 NAILS PER SHINGLES

NAILS OR STAPLES USED TO FASTEN ASPHALT SHINGLES SHALL MEET OR EXCEED THE MANUFACTURER'S RECOMMENDATIONS AND SHALL MEET THE MINIMUM PROPERTY STANDARD:

A. SHALL BE GALVANIZED OR CORROSION RESISTANT METAL.

B. SHALL BE LONG ENOUGH TO PENETRATE THE ROOFING MATERIAL AND AT LEAST 3/4" INTO THE WOOD DECK SHEATHING OR THRU THE SHEATHING.

LATERAL BRACING REQUIREMENTS:

ALL EXTERIOR WALLS AND MAIN CROSS-STUD PARTITIONS SHALL BE EFFECTIVELY AND THOROUGHLY BRACED AT EACH END, OR AS NEAR THERE TO AS POSSIBLE AND AT LIST EVERY 25 FEET OF LENGTH BY ONE OF THE FOLLOWING METHODS:

1 NOMINAL 1 X 4 CONTINUOUS DIAGONAL BRACES LET INTO TOP AND BOTTOM PLATES AND INTERVENING STUDS, PLACED AT AN ANGLE APPROXIMATELY 45 DEGREES FROM THE HORIZONTAL AND ATTACHED TO THE FRAMING WITH 2-8d NAILS AT PLATES AND STUDS.

2 WHEN DIAGONAL BRACING CAN NOT BE INSTALLED PROVIDE 3/8 INCHES THICK PLYWOOD PANEL, 48 INCHES WIDE, COVERING 3 STUD SPACES NAIL WITH 8d @ 6" O.C. @ EDGES, 12" O.C. AT INTERMEDIATE SUPPORTS.

* RAFTER JOIST AND LEDGER SIZES WILL VARY DEPENDING ON SPAN AND ROOF LOADING.

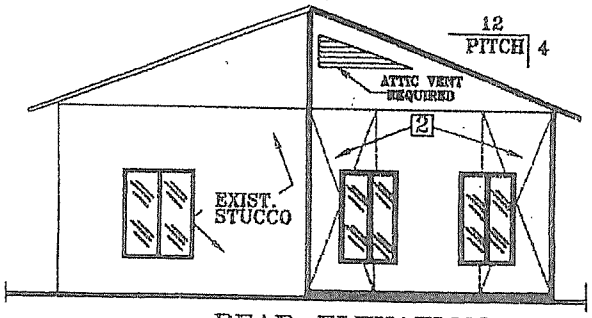

REAR ELEVATION

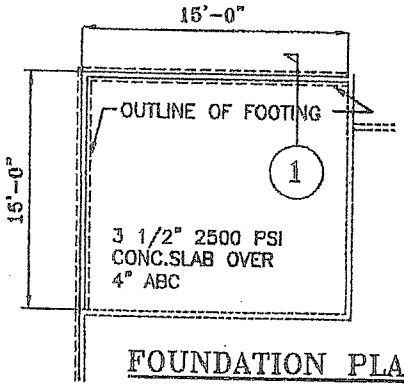

FOUNDATION PLAN

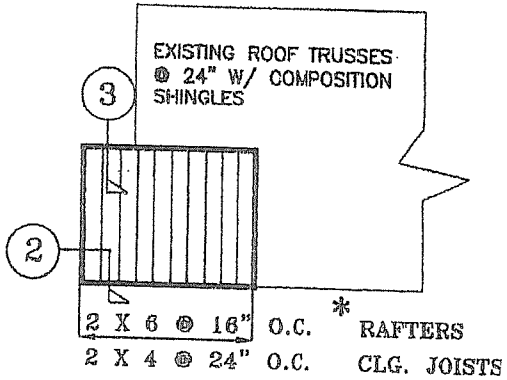

ROOF PLAN

BLOCK WALL DETAIL

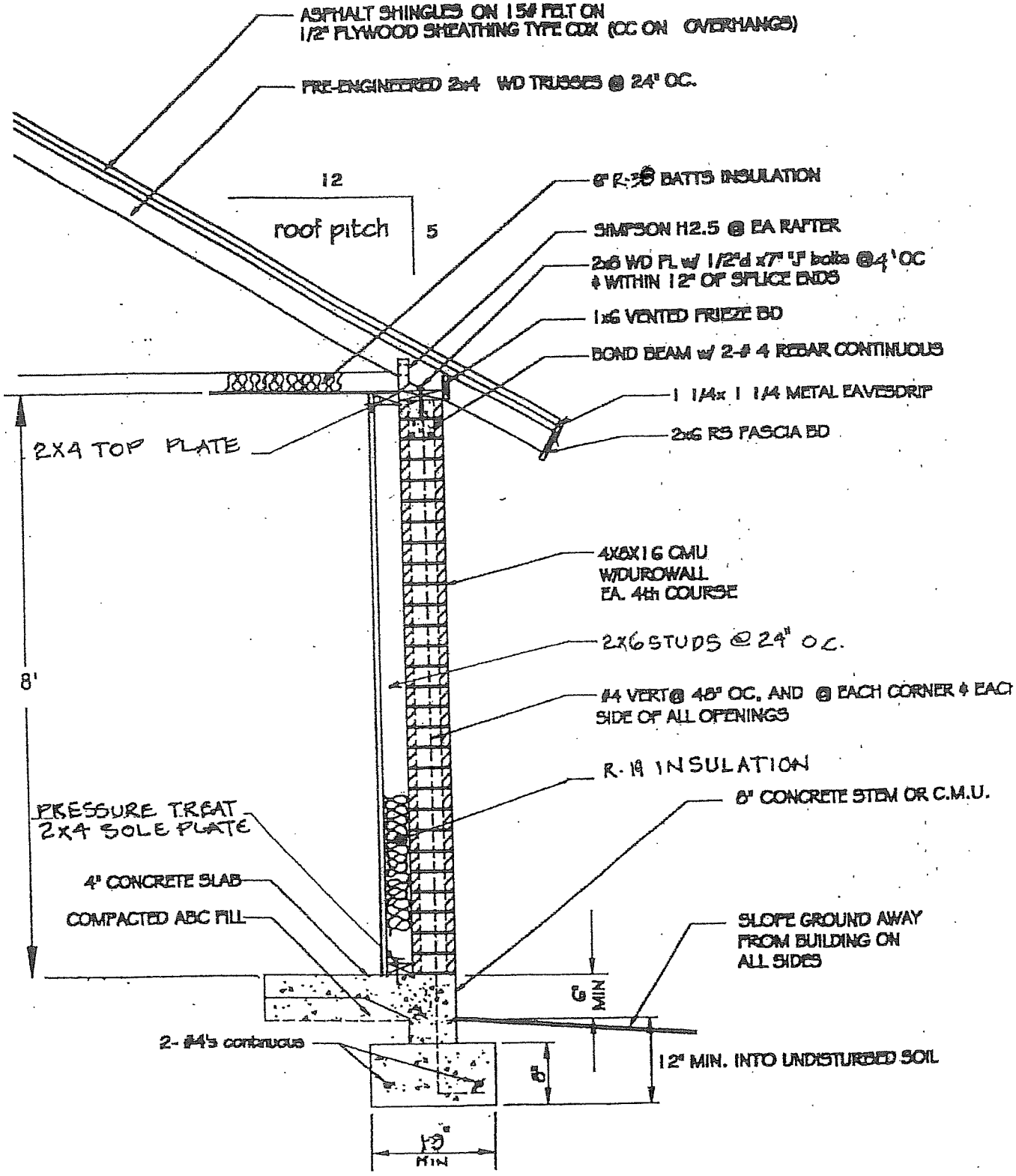

E M U CROSS-SECTION

Rev. 11/27/2017

STUCCO FRAME WALL DETAIL

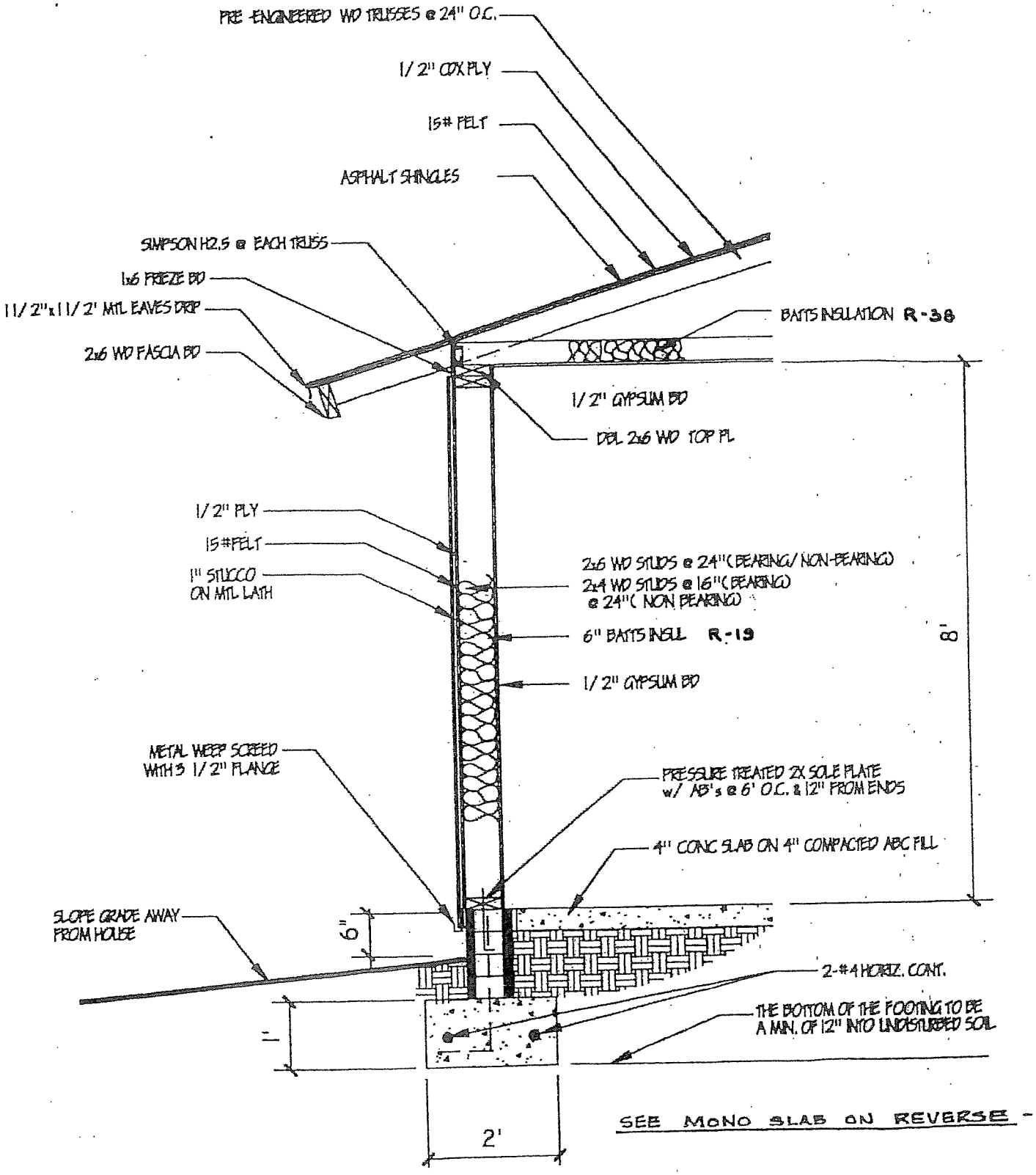

TYPICAL 2X WALL SECTION

SCALE: NOT TO SCALE

SAMPLE

STUCCO FRAME WALL DETAIL

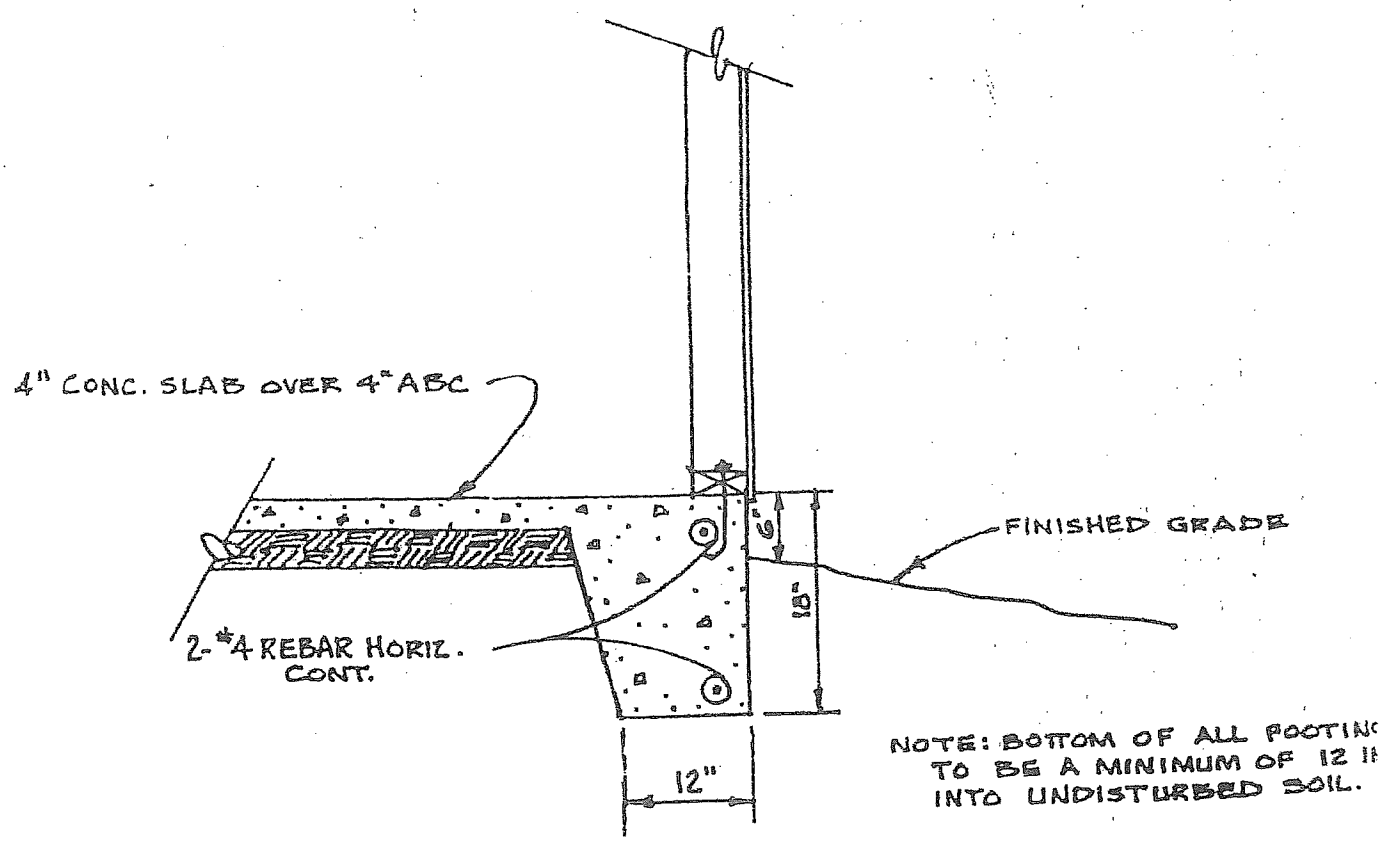

TYPICAL 2X WALL SECTION

SCALE: NOT TO SCALE

SAMPLE

PATIO COVER

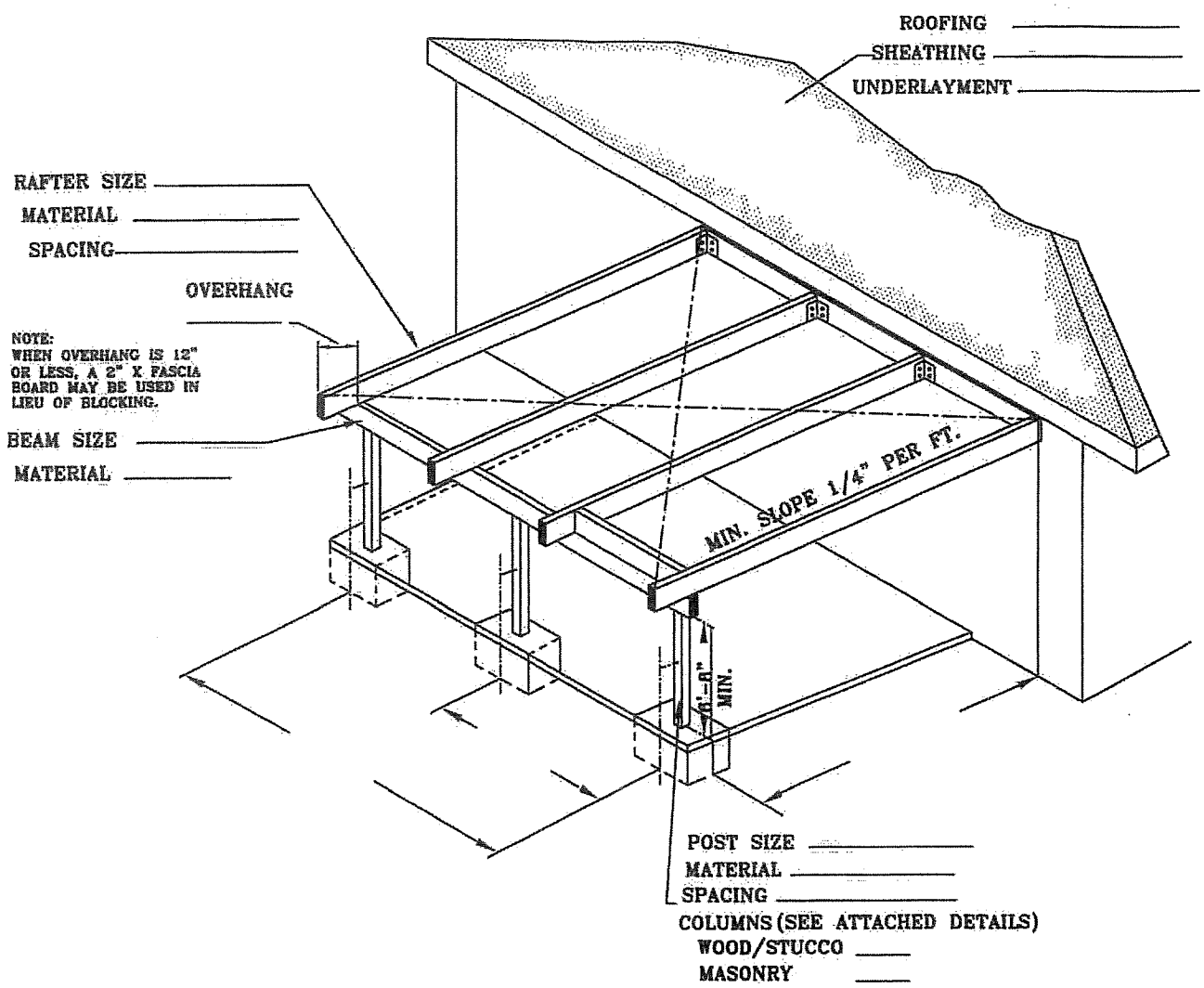

GYPSUM BOARD CEILINGS SHALL BE EXTERIOR GRADE REFERED TO AS "BROWN BOARD" ICBO #1874

Minimum Beam Sizes (Inches)								
Post Spacing (ft)	Rafter spans (ft)							
	6	8	10	12	14	16	18	20
4	4x4	4x4	4x4	4x4	4x4	4x4	4x4	4x6
6	4x4	4x4	4x6	4x6	4x6	4x6	4x6	4x6
8	4x6	4x6	4x6	4x6	4x8	4x8	4x8	4x8
10	4x6	4x8	4x8	4x8	4x10	4x10	4x10	4x10
12	4x8	4x8	4x10	4x10	4x10	4x12	4x12	4x12
14	4x8	4x10	4x10	4x12	4x12	4x12	4x14	4x14
16	4x10	4x10	4x12	4x12	4x14	4x14	4x16	4x16
18	4x10	4x12	4x14	4x14	4x16	4x16	4x16	4x16
20	4x12	4x14	4x14	4x16	4x16	4x18	4x18	4x18

BEAM TABLE IS BASED ON VALUES FOR DOUGLAS FIR/LARCH #2 OR BETTER.

Minimum Rafter sizes (inches)			
RAFTER SPAN(ft)	Rafter spacing (center to center)		
	12	16	24
10	2x6	2x6	2x6
11	2x6	2x6	2x8
12	2x6	2x6	2x8
13	2x6	2x8	2x8
14	2x6	2x8	2x10
15	2x8	2x8	2x10
16	2x8	2x8	2x10
17	2x8	2x10	2x10
18	2x8	2x10	2x12
19	2x8	2x10	2x12
20	2x10	2x10	2x12

RAFTER TABLE IS BASED ON VALUES FOR HEM FIR #2 OR BETTER.

PATIO COVER

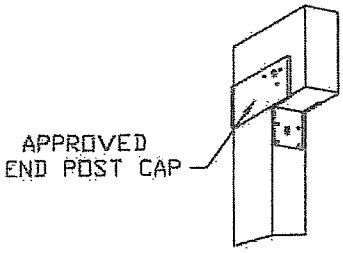

NOTE:
O.S.B. SHETING IS REQUIRE TO HAVE A MINIMUM OF 1/8" SPACING AT ALL EDGES

1 END POST AND BEAM

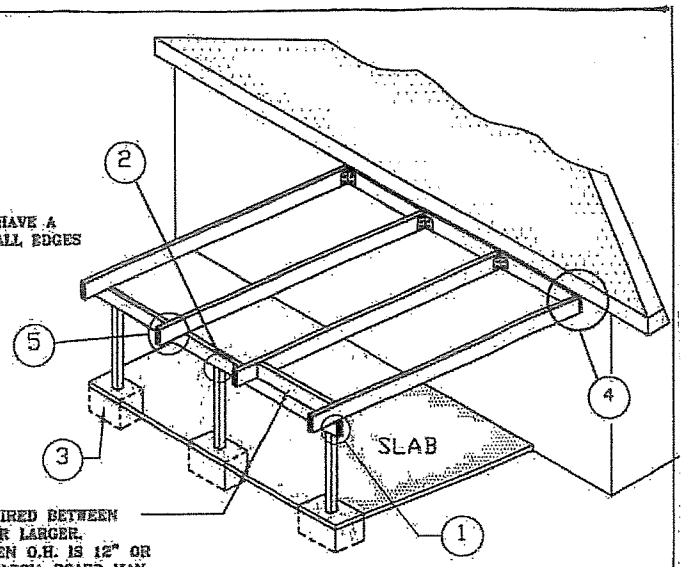

BLOCKING REQUIRED BETWEEN JOISTS 2"X6" OR LARGER. EXCEPTION; WHEN O.H. IS 12" OR LESS; A 2" X FASCIA BOARD MAY BE USED IN LIEU OF BLOCKING

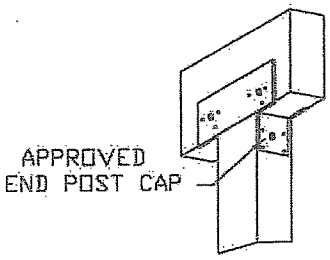

2 POST AND BEAM

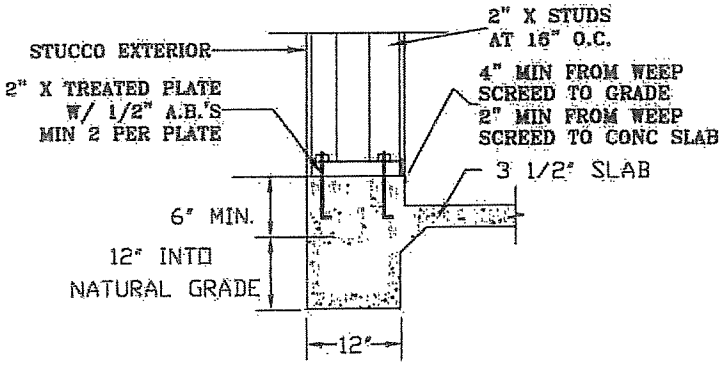

3A FOOTING DETAIL

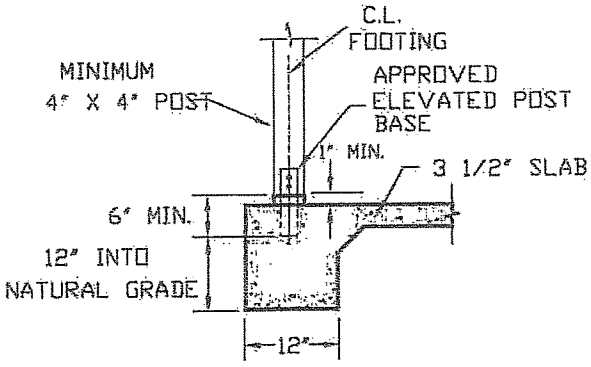

3 FOOTING DETAIL

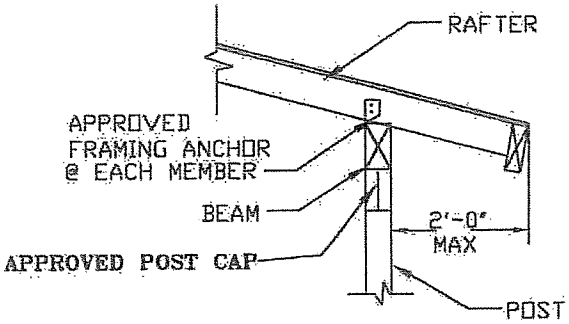

5 RAFTER TO BEAM

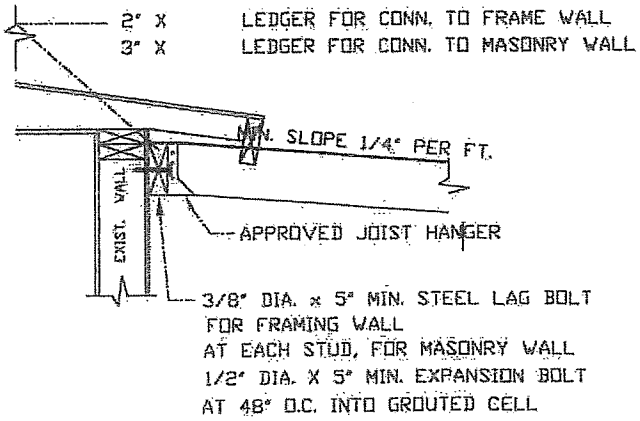

4 LEDGER TO FRAME WALL
LEDGER TO MASONRY WALL

NOTE:
REMOVE STUCCO, LATHE AND FOAM FOR WOOD TO WOOD CONNECTION AT LEDGER.

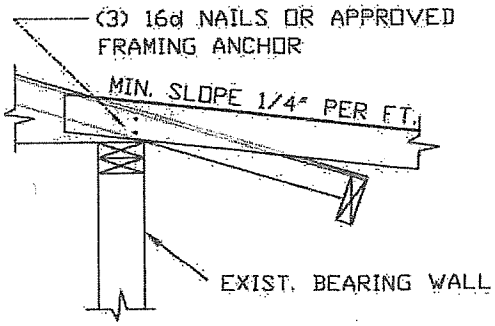

4-A ALTERNATE ATTACHMENT
FOR RAFTER ON TO BEARING WALL

SPECIFICATIONS FOR RETAINING WALLS

RETAINING WALLS SHOWN ARE DISIGNED FOR SOIL BEARING CAPACITIES OF 1200 P.S.F. HEIGHTS ARE NOT TO EXCEED THE MAXIMUMS SHOWN.
APPROVED ENGINEERED DESIGNS AND CALCULATION MUST BE SUBMITTED FOR APPROVAL FOR RETAINER WALLS WHICH EXCEED THE HEIGHTS ON THE CHART.

MASONRY PATIO WALLS UP TO 5'-0" MAXIMUM HEIGHT MAY BE BUILT ON TOP OF RETAINING WALLS PROVIDING THE CONSTRUCTION OF THE RETAINER WALL IS INCREASED TO THE NEXT LEVEL OF THE SPEC CHART. EXAMPLE: 3'-0" HIGH RETAINER WALL BUILT TO THE SPECIFICATIONS OF THE 4'-0" WALL MAY BE USED TO SUPPORT AND ADDITIONAL PATIO WALL OF 5'-0"MAXIMUM.

NOTE: IF THESE DESIGNS ARE USED TO OBTAIN A PERMIT THE DESIGN MAY NOT BE FIELD CHANGED

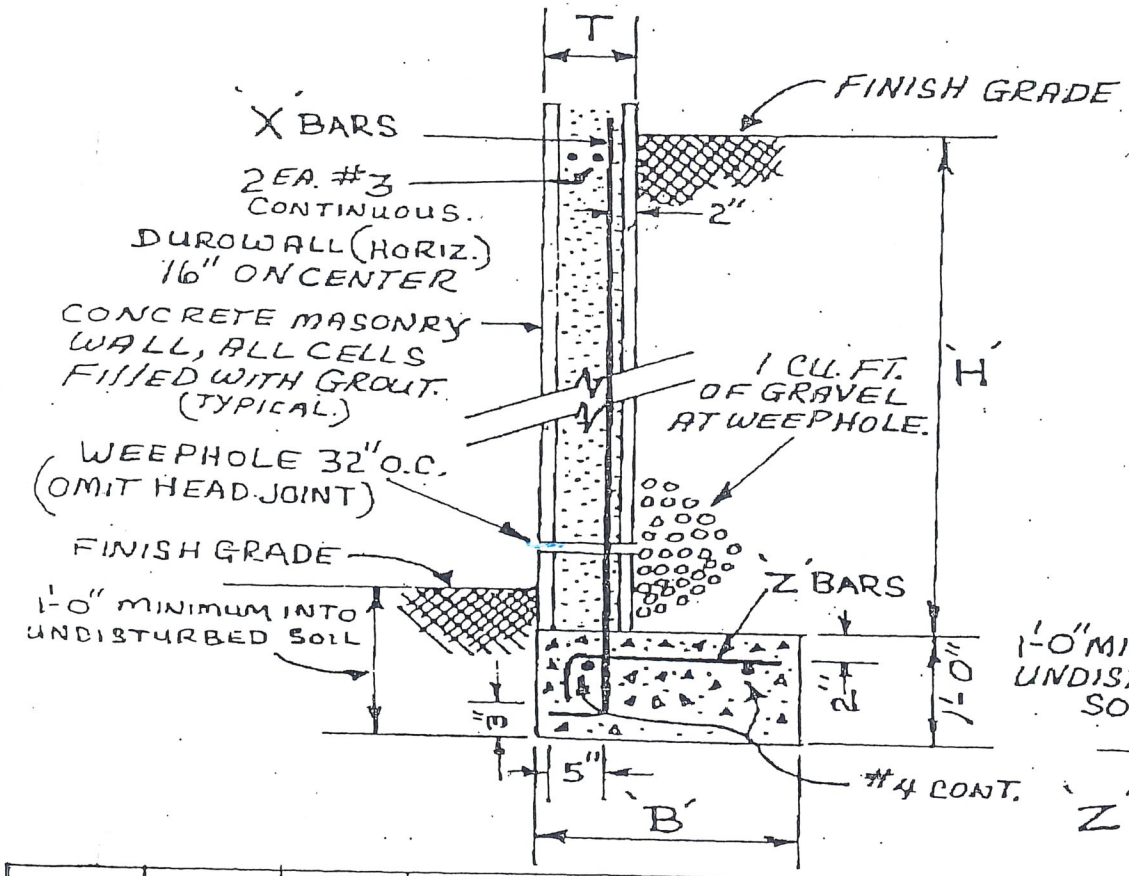

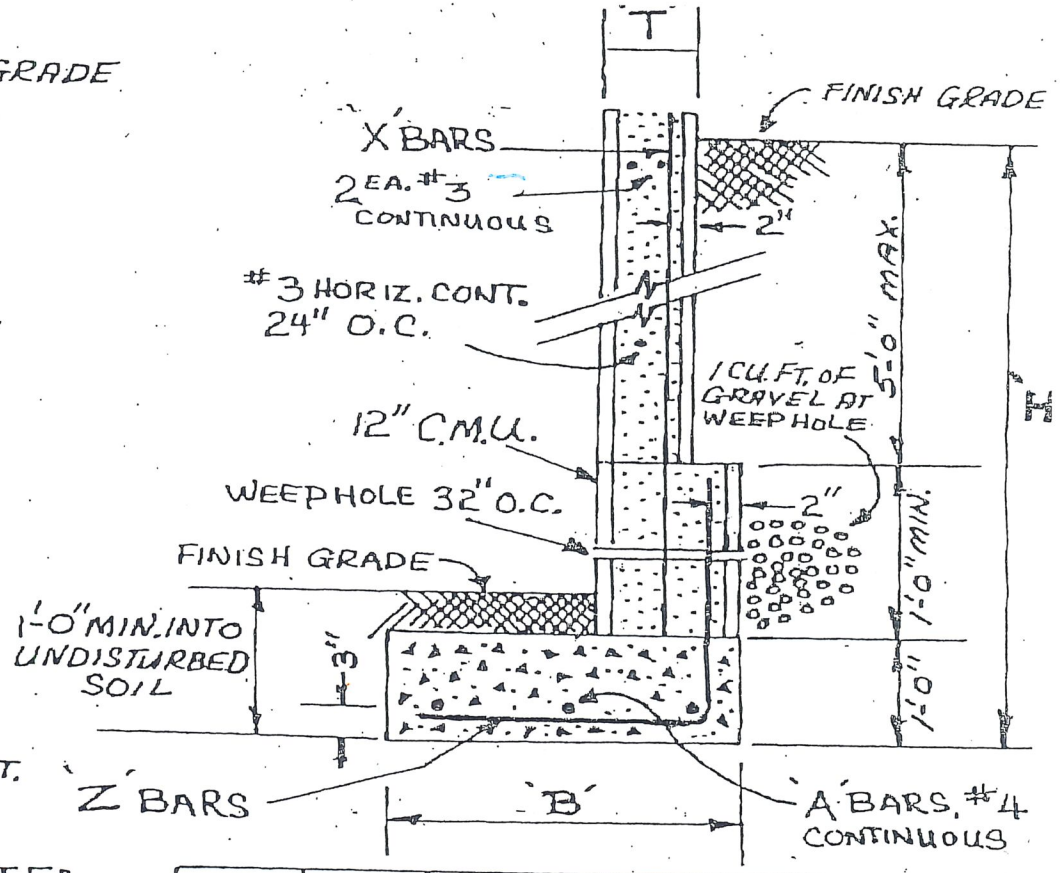

H	T	B	X	Z
2'-0"	6" & 8"	1'-8"	#3 @ 32"	NONE
3'-0"	6" & 8"	1'-10"	#3 @ 24"	#3 @ 48"
4'-0"	8"	2'-6"	#4 @ 32"	#4 @ 32"
5'-0"	8"	3'-0"	#4 @ 16"	#4 @ 32"

NOTE: 'Z' BARS ARE DESIGNED FOR TENSION AT CRITICAL POINTS. THEY MUST BE LOCATED AS SHOWN.

H	T	B	A	X & Z
3'-0"	6" & 8"	1'-9"	3 EA. @ 8"	#3 @ 24"
4'-0"	8"	2'-2"	3 EA. @ 10"	#4 @ 32"
5'-0"	8"	2'-9"	4 EA. @ 9"	#4 @ 16"
6'-0"	8"	3'-6"	4 EA. @ 12"	#4 @ 16"